# FUP450
# Spare parts catalogue

Duun Industrier as
7630 Åsen, Norway
www.duun.no

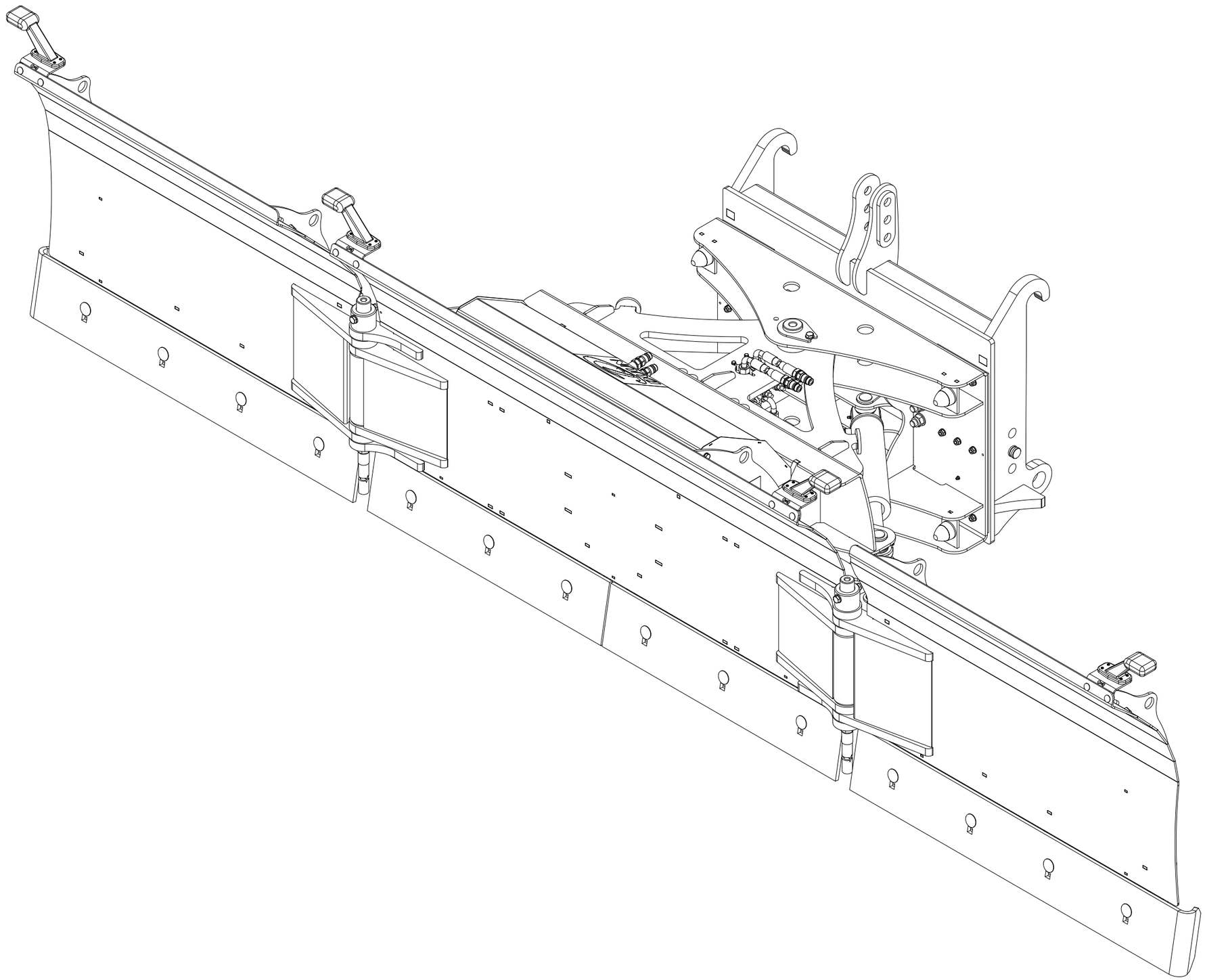

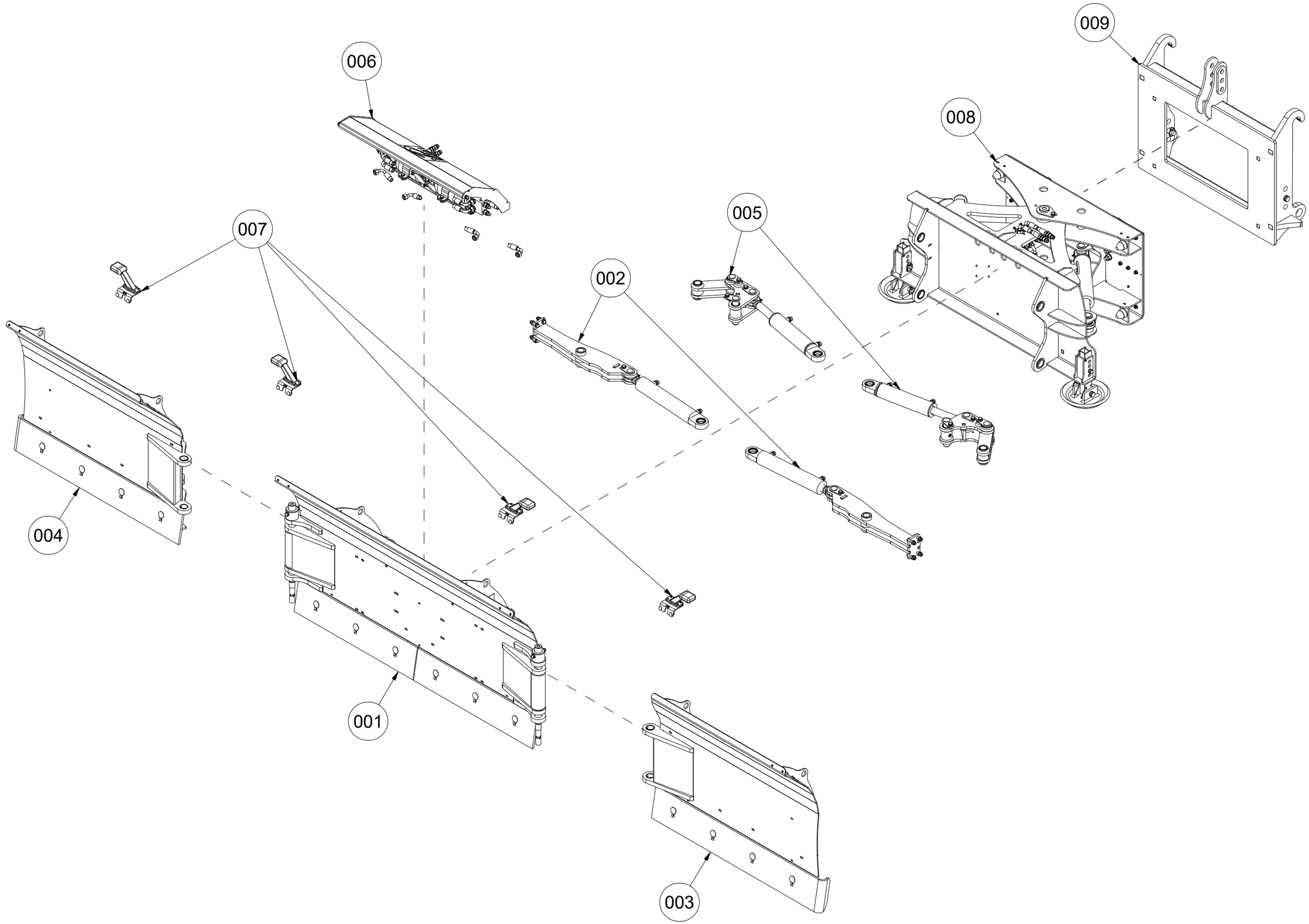
006
009
008
007
005
002
004
001
003

# 001 The main blade FUP450

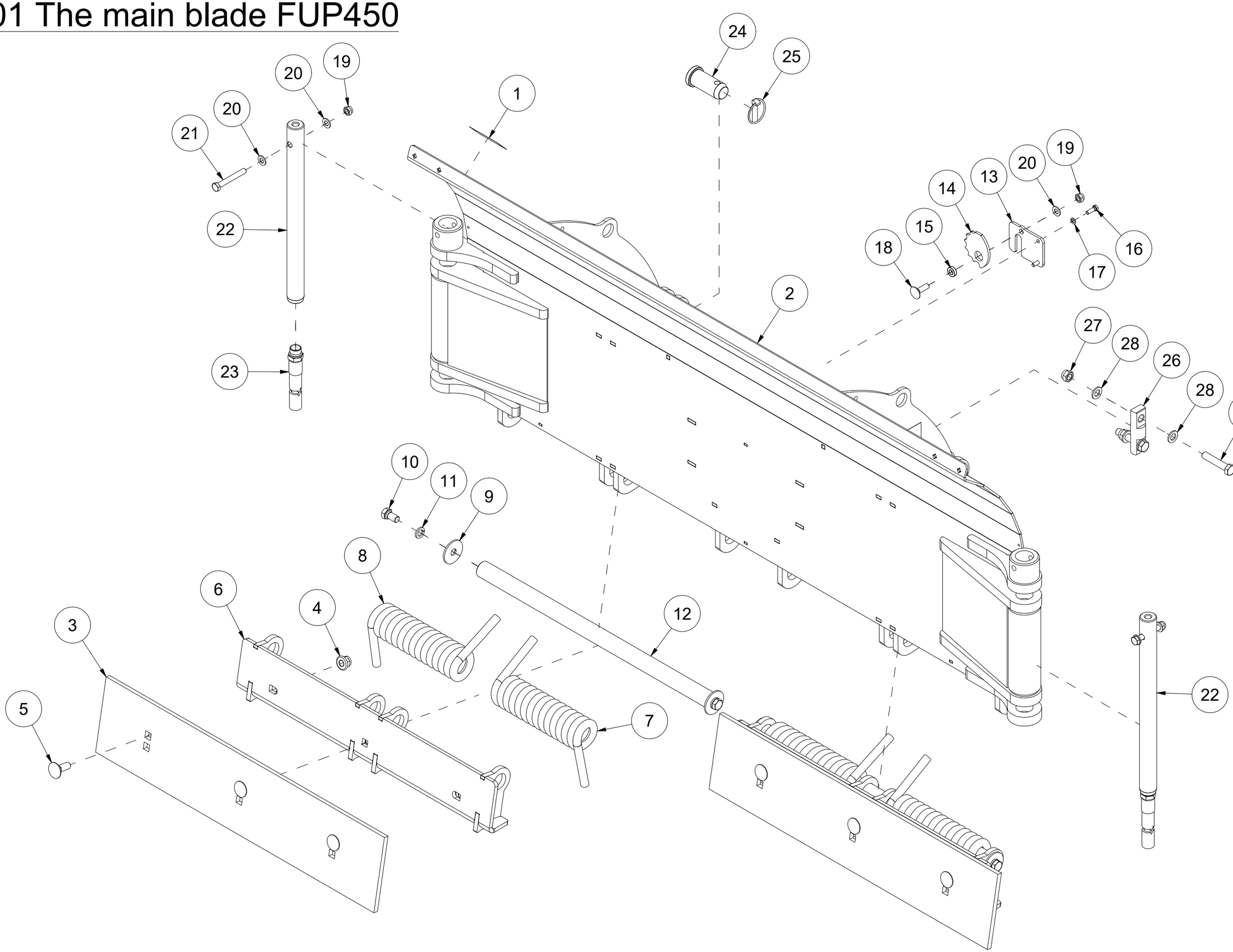

| Pos | Qty | Article no | Designation |
|---|---|---|---|
| 1 | 2 | 2935088 | Adhesive label 90x48 Hand pinch hazard |
| 2 | 1 | 24101010 | The main blade L1896 v2 |
| 3 | 2 | 2112226 | Flat wear steel 12x200x915 |
| 4 | 6 | 2489175 | Locking nut with flange M16 ElZn DIN 6926 |
| 5 | 6 | 2343494 | Locking screw M16x45 ElZn 8.8 DIN 603 |
| 6 | 2 | 24101013 | Vike plate for the main blade L830 |
| 7 | 2 | 24101065 | Spring for shear trigger Ø19VV |
| 8 | 2 | 24101066 | Spring for shear trigger Ø19 HV |
| 9 | 4 | 23521053 | Washer Ø17/60x4 |
| 10 | 4 | 2422485 | Hexagon screw M16x30 ElZn 8.8 DIN 933 |
| 11 | 4 | 2534078 | Spring washer M16 ElZn DIN 127 |
| 12 | 2 | 24101064 | Shaft for spring releaser Ø40x738 |
| 13 | 4 | 24101027 | Lid for spring tensioner |
| 14 | 4 | 24101028 | Spring tensioner |
| 15 | 4 | 24101029 | Sliding bearing Ø12/24x7 |
| 16 | 8 | 2422246 | Hexagon screw M8x25 ElZn 8.8 DIN 933 |
| 17 | 8 | 2534047 | Spring washer M8 ElZn DIN 127 |
| 18 | 4 | 2344352 | Locking screw M12x40 ElZn 8.8 DIN 603 |
| 19 | 6 | 2483611 | Locking nut M12 ElZn DIN 985 |
| 20 | 8 | 2531069 | Washer M12 ElZn DIN 125 |
| 21 | 2 | 2422364 | Hexagon screw M12x90 ElZn 8.8 DIN 931 |
| 22 | 2 | 24101069 | Hinge bolt Ø40x498 |
| 23 | 2 | 24101070 | Scraper L195 |
| 24 | 4 | 24101033 | Fastening bolt Ø40x90 |
| 25 | 4 | 2556145 | Linch pin Ø12x50 |
| 26 | 2 | 24101026 | Cylinder attachment bolt |
| 27 | 4 | 2483613 | Locking nut M16 ElZn DIN 985 |
| 28 | 8 | 2531078 | Washer M16 ElZn DIN 125 |
| 29 | 4 | 2422500 | Hexagon screw M16x80 ElZn 8.8 DIN 931 |

# 002 Mechanism of side wings 90° FUP450

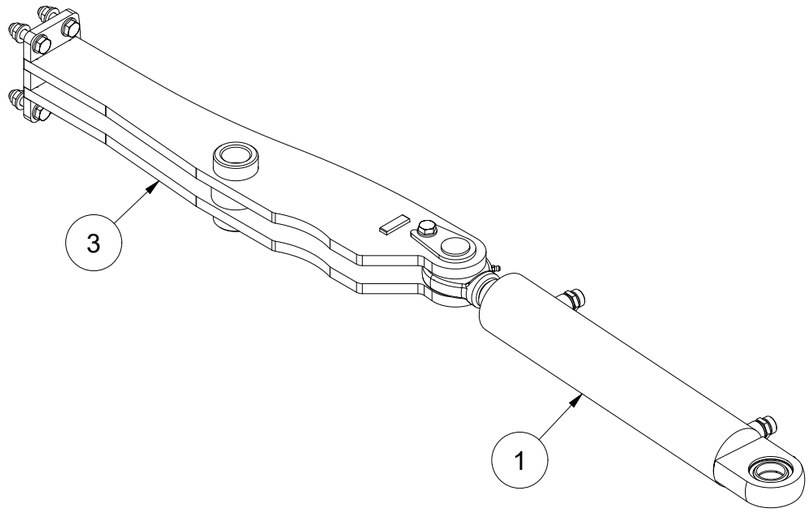


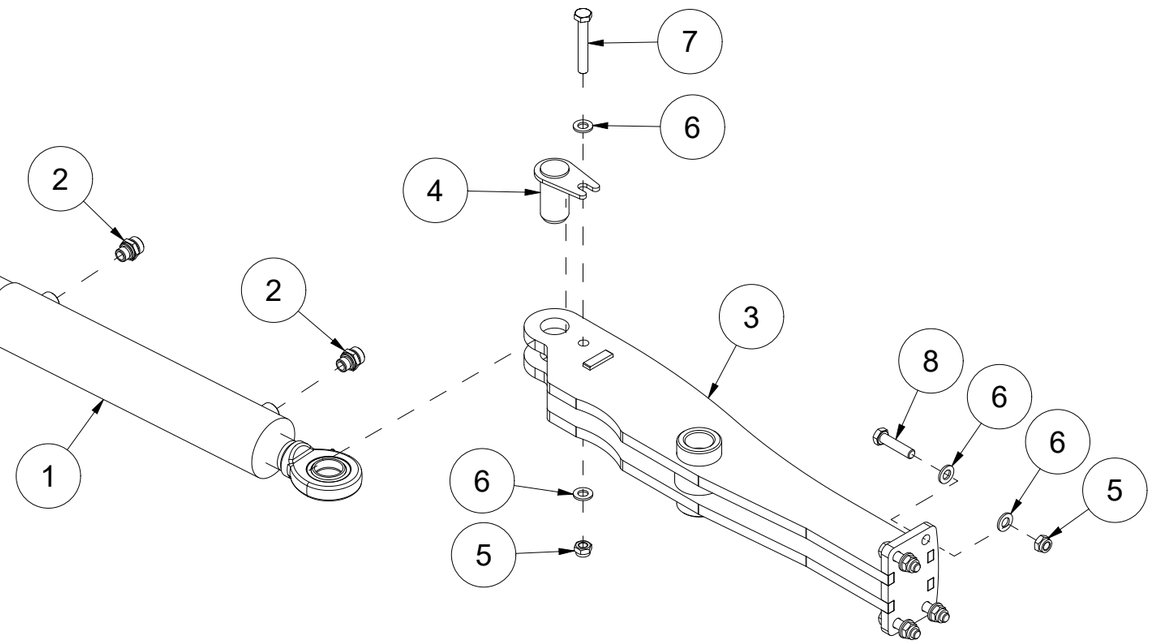


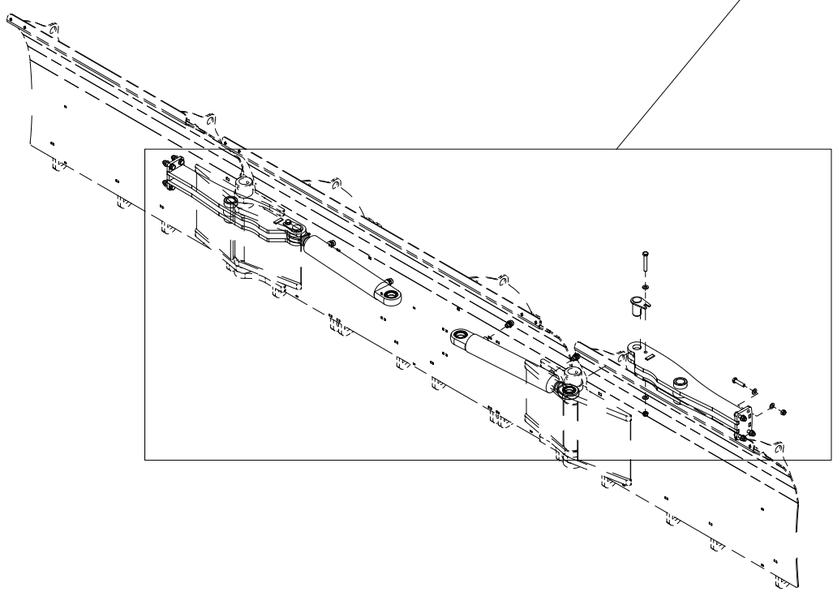

| Pos | Qty | Article no | Designation |
|---|---|---|---|
| 1 | 2 | 2955007 | Cylinder 70x40x300 l35l35 |
| 2 | 4 | 2957750 | Hexagon nipple GEK BSP 3/8" L15 ED |
| 3 | 2 | 24101050 | Side wing bracket |
| 4 | 2 | 24101021 | Bolt Ø35x65 |
| 5 | 10 | 2483611 | Locking nut M12 ElZn DIN 985 |
| 6 | 20 | 2531069 | Washer M12 ElZn DIN 125 |
| 7 | 2 | 2422363 | Hexagon screw M12x80 ElZn 8.8 DIN 931 |
| 8 | 8 | 2422356 | Hexagon screw M12x50 ElZn 8.8 DIN 931 |

# 003 Left side wing FUP450



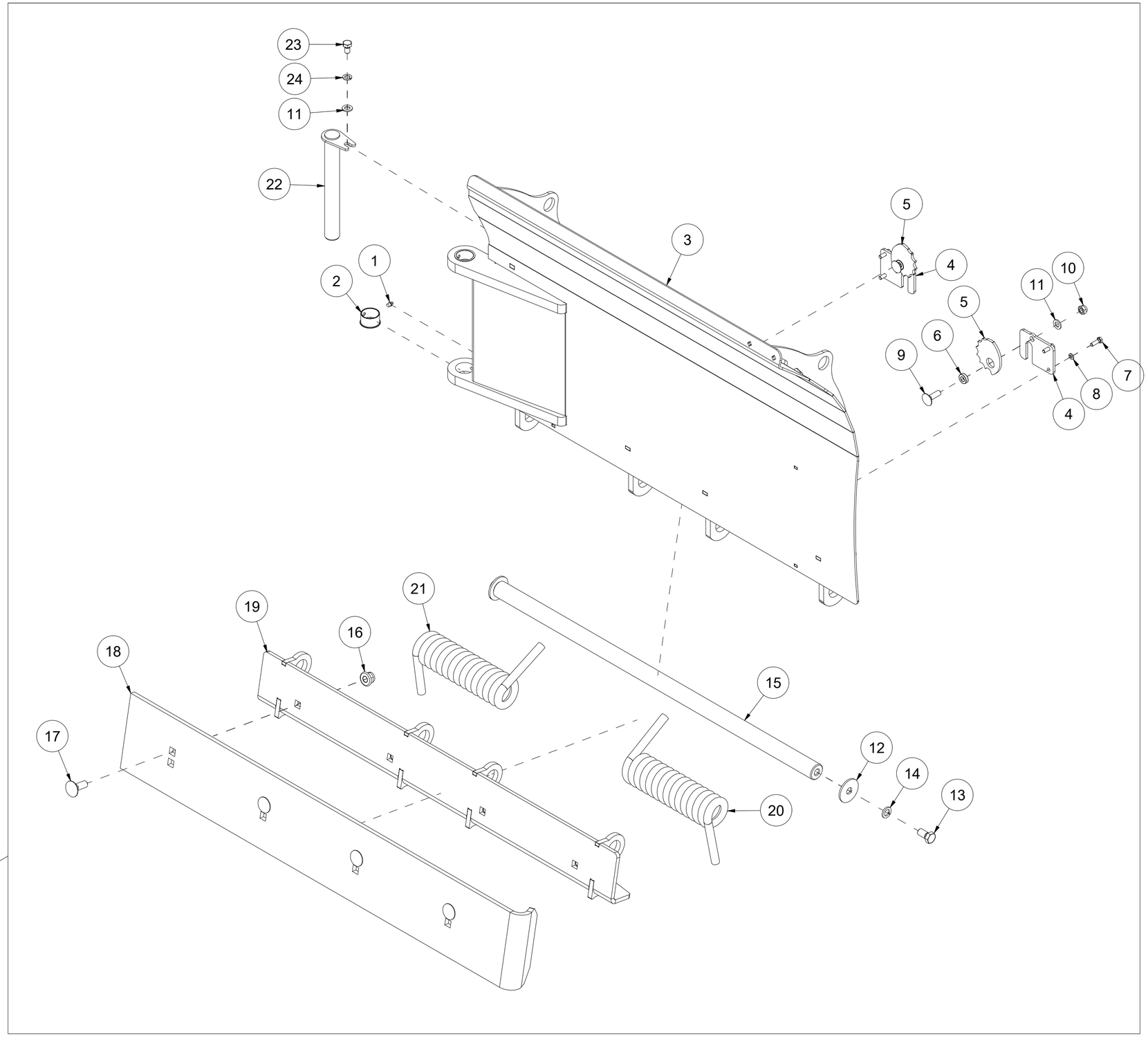

| Pos | Qty | Article no | Designation |
|---|---|---|---|
| 1 | 2 | 2478407 | Grease nipple, Straight M8 |
| 2 | 2 | 2245252 | Bushing SF1 Ø40-Ø44-25 |
| 3 | 1 | 24101011 | Left side wing L1265 v2 |
| 4 | 2 | 24101027 | Lid for spring tensioner |
| 5 | 2 | 24101028 | Spring tensioner |
| 6 | 2 | 24101029 | Sliding bearing Ø12/24x7 |
| 7 | 4 | 2422246 | Hexagon screw M8x25 ElZn 8.8 DIN 933 |
| 8 | 4 | 2534047 | Spring washer M8 ElZn DIN 127 |
| 9 | 2 | 2344352 | Locking screw M12x40 ElZn 8.8 DIN 603 |
| 10 | 2 | 2483611 | Locking nut M12 ElZn DIN 985 |
| 11 | 3 | 2531069 | Washer M12 ElZn DIN 125 |
| 12 | 2 | 23521053 | Washer Ø17/60x4 |
| 13 | 2 | 2422485 | Hexagon screw M16x30 ElZn 8.8 DIN 933 |
| 14 | 2 | 2534078 | Spring washer M16 ElZn DIN 127 |
| 15 | 1 | 24101067 | Shaft for spring releaser Ø40x1050 |
| 16 | 4 | 2489175 | Locking nut with flange M16 ElZn DIN 6926 |
| 17 | 4 | 2343494 | Locking screw M16x45 ElZn 8.8 DIN 603 |
| 18 | 1 | 2112245 | Wear steel 12x200x1280 Endebøy |
| 19 | 1 | 24101014 | Vike plate for side wing L1166 |
| 20 | 1 | 24101065 | Torsion spring Ø19VV |
| 21 | 1 | 24101066 | Torsion spring Ø19 HV |
| 22 | 1 | 24101054 | Bolt Ø35x302 |
| 23 | 1 | 2422344 | Hexagon screw M12x20 ElZn 8.8 DIN 933 |
| 24 | 1 | 2534069 | Spring washer M12 ElZn DIN 127 |

# 004 Right side wing FUP450

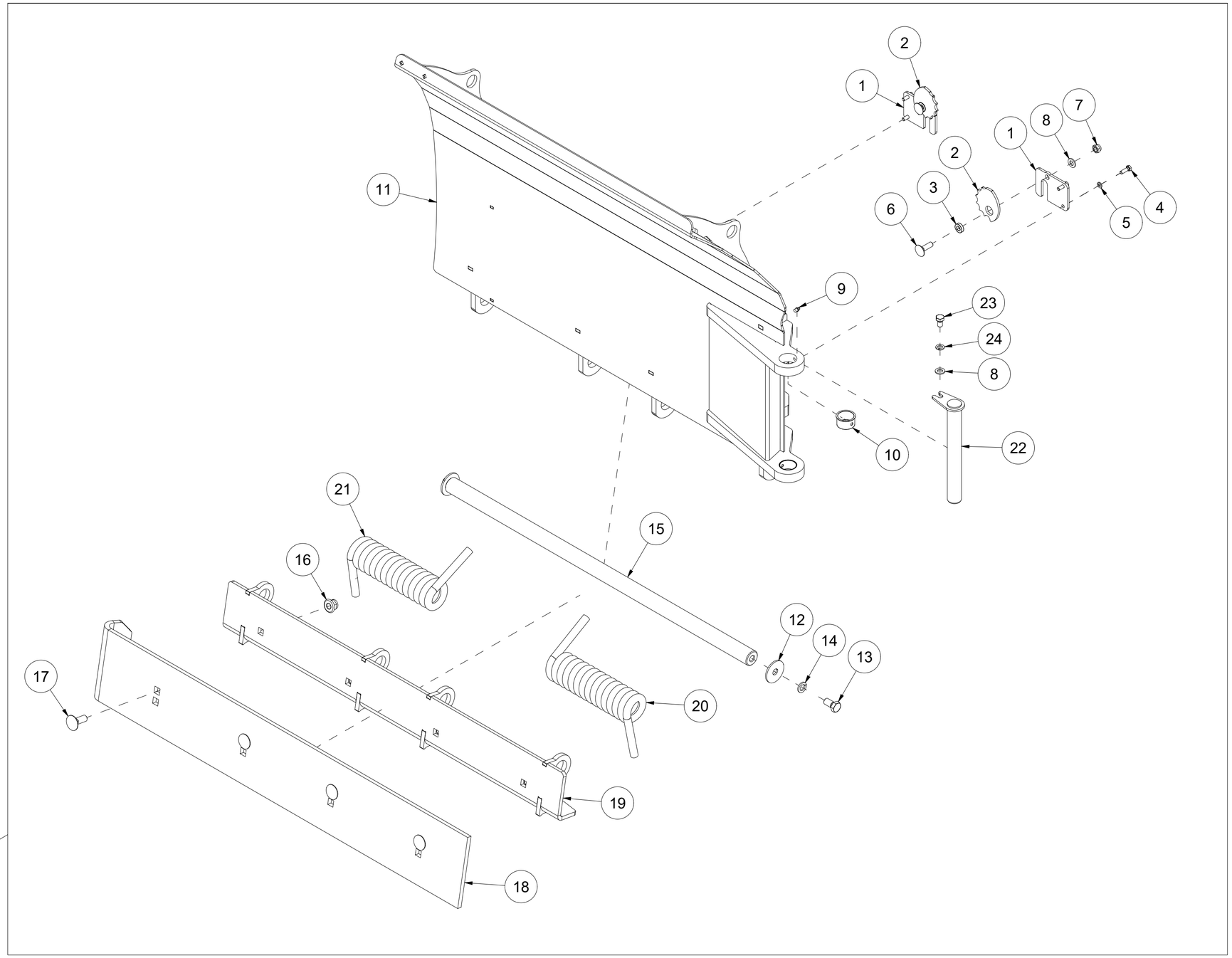


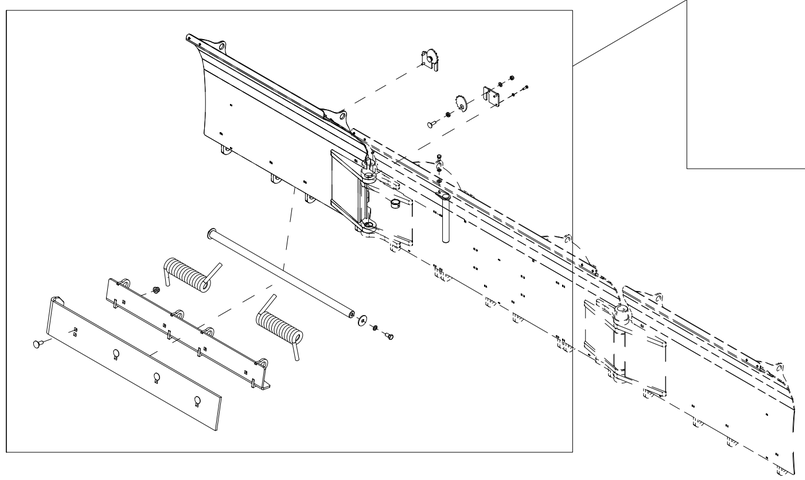

| Pos | Qty | Article no | Designation |
|---|---|---|---|
| 1 | 2 | 24101027 | Lid of spring tensioner |
| 2 | 2 | 24101028 | Spring tensioner |
| 3 | 2 | 24101029 | Sliding bearing Ø12/24x7 |
| 4 | 4 | 2422246 | Hexagon screw M8x25 ElZn 8.8 DIN 933 |
| 5 | 4 | 2534047 | Spring washer M8 ElZn DIN 127 |
| 6 | 2 | 2344352 | Locking screw M12x40 ElZn 8.8 DIN 603 |
| 7 | 2 | 2483611 | Locking nut M12 ElZn DIN 985 |
| 8 | 3 | 2531069 | Washer M12 ElZn DIN 125 |
| 9 | 2 | 2478407 | Grease nipple, Straight M8 |
| 10 | 2 | 2245252 | Bushing SF1 Ø40-Ø44-25 |
| 11 | 1 | 24101012 | Right side wing L1265 v2 |
| 12 | 2 | 23521053 | Washer Ø17/60x4 |
| 13 | 2 | 2422485 | Hexagon screw M16x30 ElZn 8.8 DIN 933 |
| 14 | 2 | 2534078 | Spring washer M16 ElZn DIN 127 |
| 15 | 1 | 24101067 | Shaft release spring Ø40x1050 |
| 16 | 4 | 2489175 | Locking nut with flange M16 ElZn DIN 6926 |
| 17 | 4 | 2343494 | Locking screw M16x45 ElZn 8.8 DIN 603 |
| 18 | 1 | 2112245 | Wear steel 12x200x1280 End bend |
| 19 | 1 | 24101014 | Vike plate for side wing L1166 |
| 20 | 1 | 24101065 | Torsion spring Ø19VV |
| 21 | 1 | 24101066 | Torsion spring Ø19 HV |
| 22 | 1 | 24101054 | Bolt Ø35x302 |
| 23 | 1 | 2422344 | Hexagon screw M12x20 ElZn 8.8 DIN 933 |
| 24 | 1 | 2534069 | Spring washer M12 ElZn DIN 127 |

# 005 Mechanism of side wing 180° FUP450

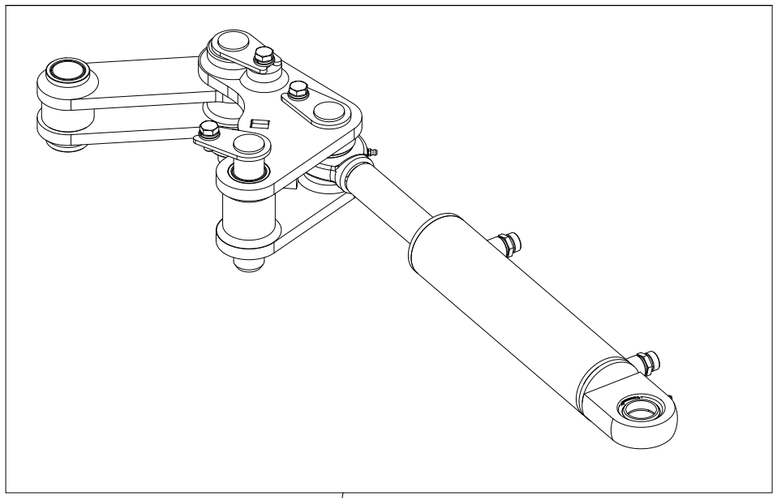

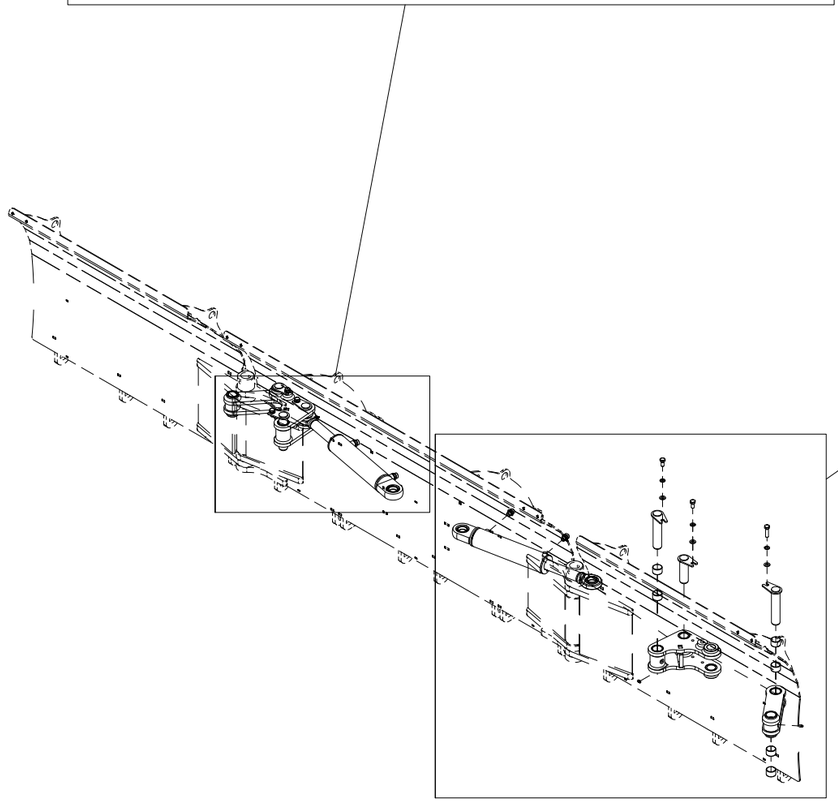

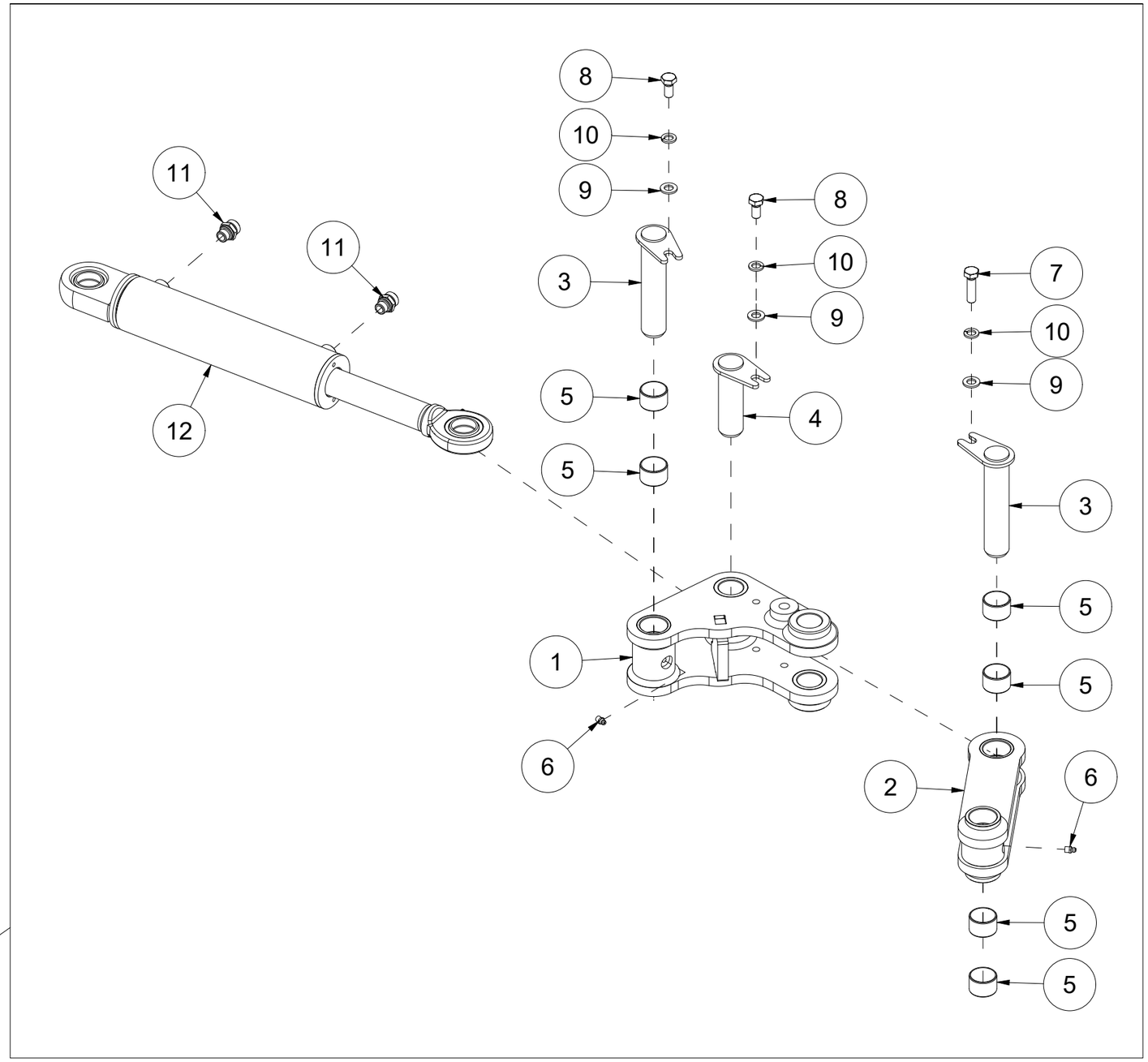

| Pos | Qty | Article no | Designation |
|---|---|---|---|
| 1 | 2 | 24101051 | Connection handle |
| 2 | 2 | 24101052 | Link |
| 3 | 4 | 24101053 | Bolt Ø35x162 |
| 4 | 2 | 24101020 | Bolt Ø35x112 |
| 5 | 12 | 2245251 | Bushing ZDB P 353925 |
| 6 | 6 | 2478407 | Grease nipple, Straight M8 |
| 7 | 2 | 2425354 | Hexagon screw M12x45 ElZn 8.8 DIN 933 |
| 8 | 4 | 2422346 | Hexagon screw M12x25 ElZn 8.8 DIN 933 |
| 9 | 6 | 2531069 | Washer M12 ElZn DIN 125 |
| 10 | 6 | 2534069 | Spring washer M12 ElZn DIN 127 |
| 11 | 4 | 2957750 | Hexagon nipple GEK BSP 3/8" L15 ED |
| 12 | 2 | 2955009 | Cylinder 70/40x250 I35I35 L485 RAL9005 |

# 006 Accumulators FUP450

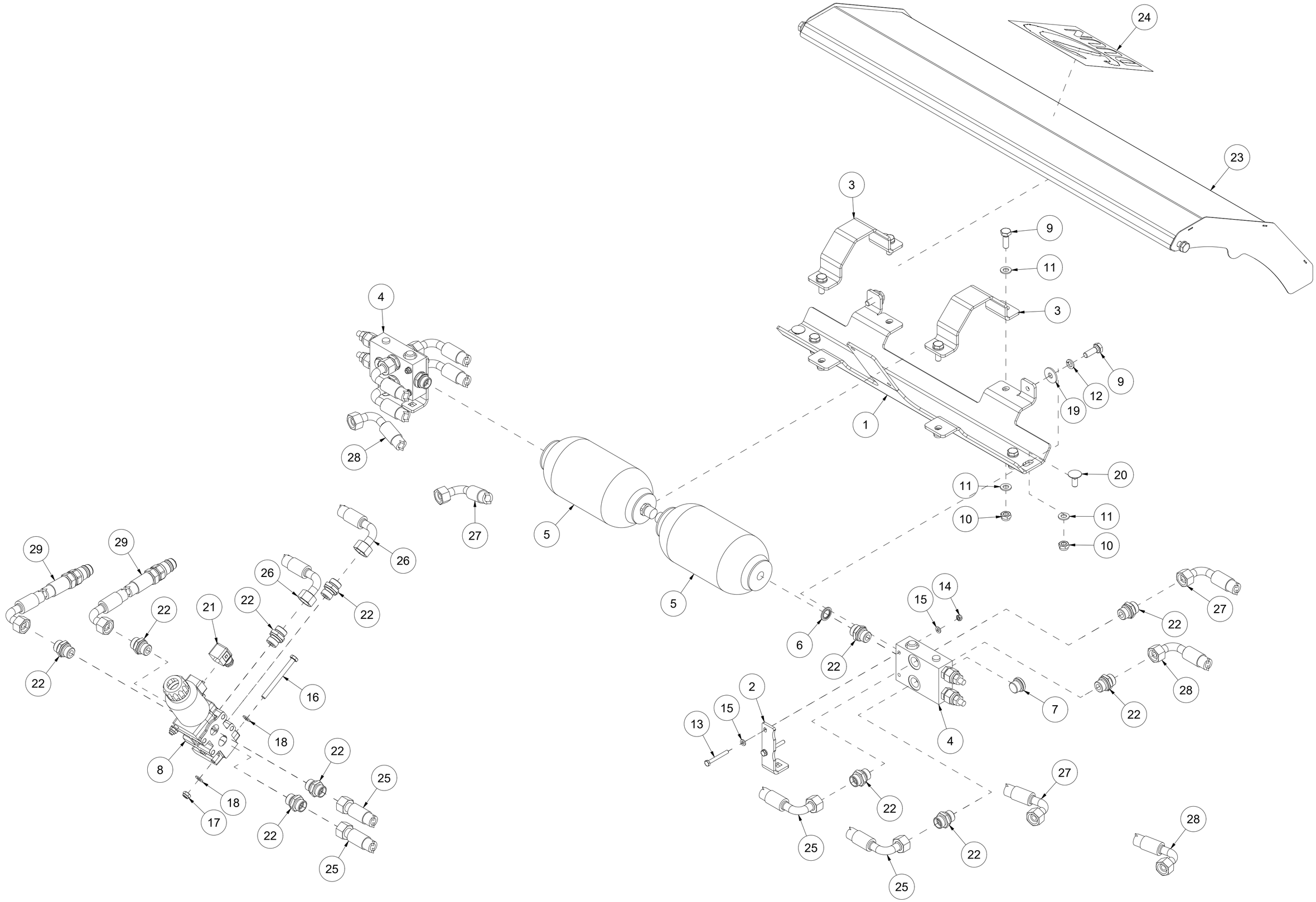

| Pos | Qty | Article no | Designation |
|---|---|---|---|
| 1 | 1 | 24101023 | Bracket |
| 2 | 2 | 24101024 | Bracket |
| 3 | 2 | 24101025 | Clamps |
| 4 | 2 | 2955339 | Safety valve/alum TS rotation |
| 5 | 2 | 2955310 | Accumulator 1.4l TS rotation |
| 6 | 2 | 2957863 | Hydraulic gasket M18 |
| 7 | 2 | 2957411 | Plug 1/2 w/Gasket |
| 8 | 1 | 2955239 | Selector valve |
| 9 | 10 | 2422299 | Hexagon screw M10x30 ElZn 8.8 DIN 933 |
| 10 | 10 | 2483610 | Locking nut M10 ElZn DIN 985 |
| 11 | 18 | 2531060 | Washer M10 ElZn DIN 125 |
| 12 | 2 | 2534060 | Spring washer M10 ElZn DIN 127 |
| 13 | 4 | 2422217 | Hexagon screw M6x50 ElZn 8.8 DIN 931 |
| 14 | 4 | 2483608 | Locking nut M6 ElZn DIN 985 |
| 15 | 8 | 2531039 | Washer M6 ElZn DIN 125 |
| 16 | 2 | 2422265 | Hexagon screw M8x90 ElZn 8.8 DIN931 |
| 17 | 2 | 2483609 | Locking nut M8 ElZn DIN 985 |
| 18 | 4 | 2531047 | Washer M8 ElZn DIN 125 |
| 19 | 2 | 2533060 | Body washer M10 ElZn DIN 9021 |
| 20 | 2 | 2344330 | Locking screw M10x25 ElZn 8.8 DIN 603 |
| 21 | 1 | 2957402 | DIN Plug 12/24VV 5,0m LED |
| 22 | 16 | 2957768 | Hexagon nipple GEK BSP 1/2" L15 ED |
| 23 | 1 | 24101036 | Cover |
| 24 | 1 | 2935151 | Adhesive label Duun 200x200 |
| 25 | 2 | 2958241 | Hydraulic hose 1/2" L300 |
| 26 | 2 | 2958524 | Hydraulic hose 1/2" L390 |
| 27 | 2 | 2958525 | Hydraulic hose 1/2" L360 |
| 28 | 2 | 2958526 | Hydraulic hose 1/2" L600 |
| 29 | 2 | 2958180 | Hydraulic hose 1/2" L3250 |

# 007 Lights package FUP450

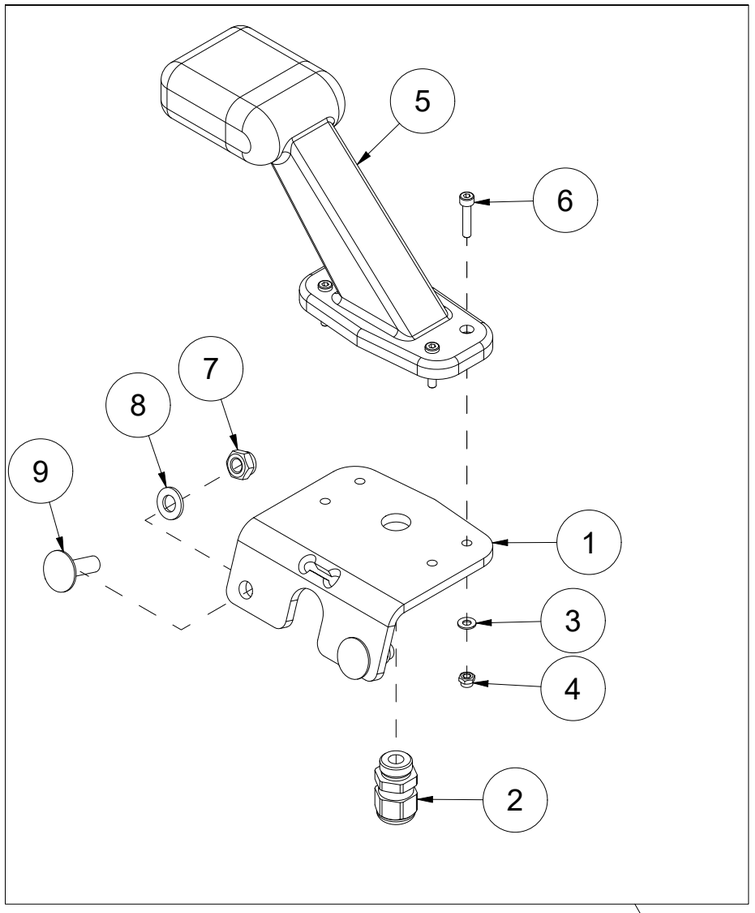


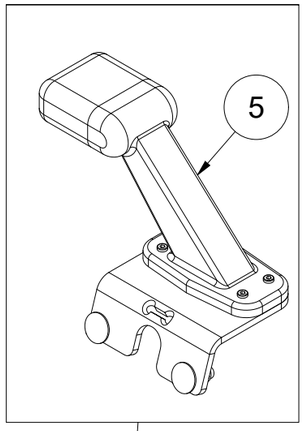


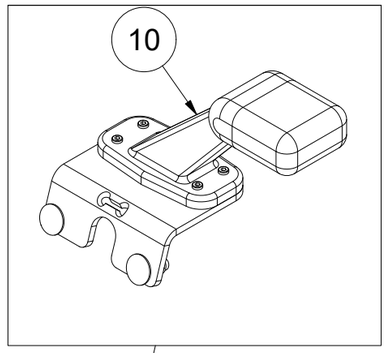


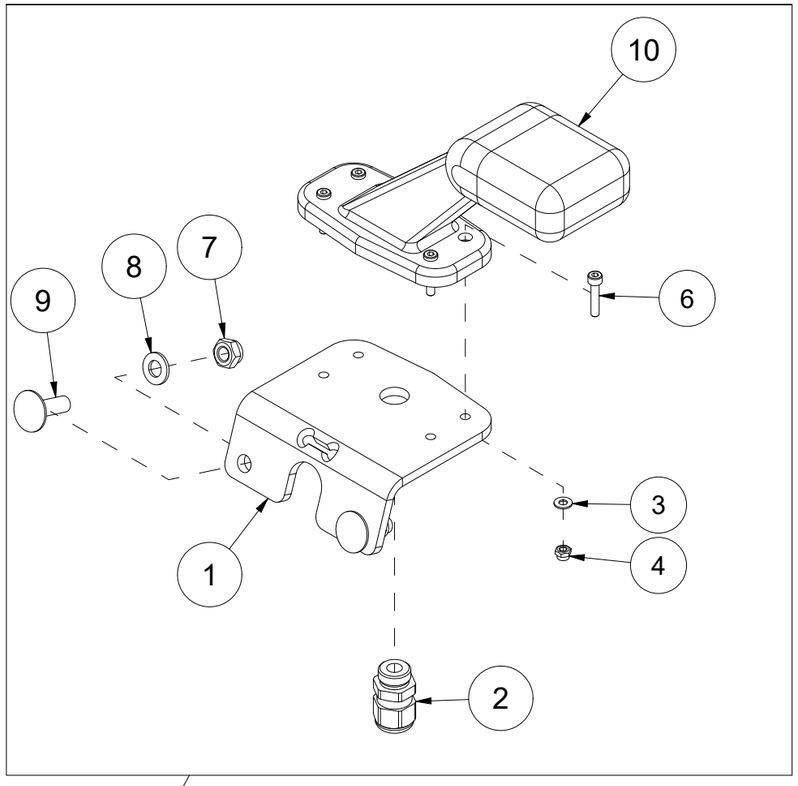


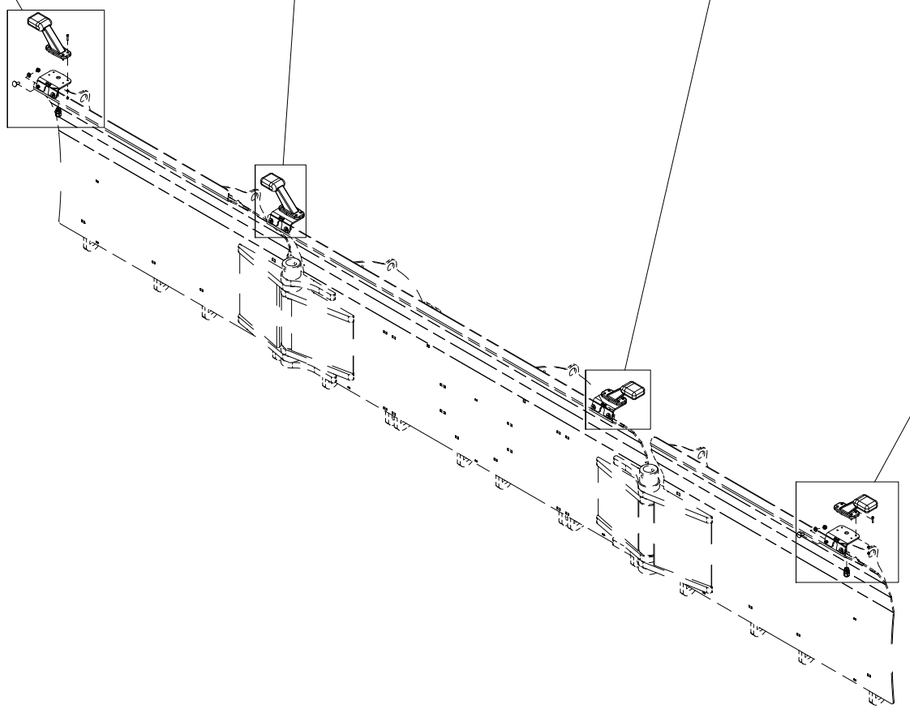

| Pos | Qty | Article no | Designation |
|---|---|---|---|
| 1 | 4 | 24101035 | Light bracket |
| 2 | 4 | 4127613 | Nipple with strain relief M16 |
| 3 | 16 | 2531023 | Washer M4 ElZn DIN 125 |
| 4 | 16 | 2483606 | Locking nut M4 ElZn DIN 985 |
| 5 | 2 | 4421031 | Right horizontal marker light 12V |
| 6 | 16 | 2477139 | Unbrako cylinder screw M4x20 ElZn DIN 912 |
| 7 | 8 | 2483609 | Locking nut M8 ElZn DIN 985 |
| 8 | 8 | 2531047 | Washer M8 ElZn DIN 125 |
| 9 | 8 | 2344246 | Locking screw M8x25 ElZn 8.8 DIN 603 |
| 10 | 2 | 4421035 | Left horizontal marker light 12V |

# 008 Swivel module FUP450

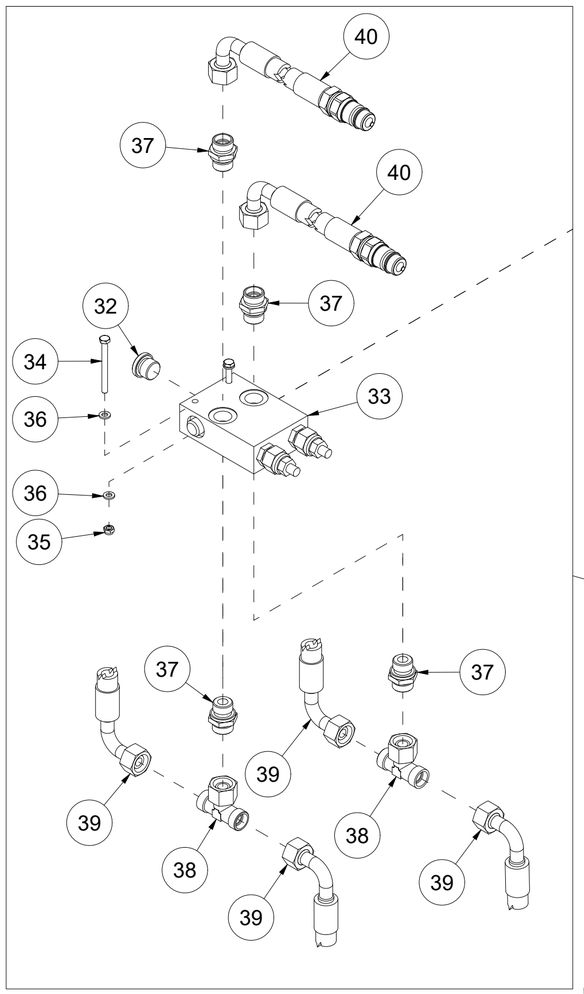


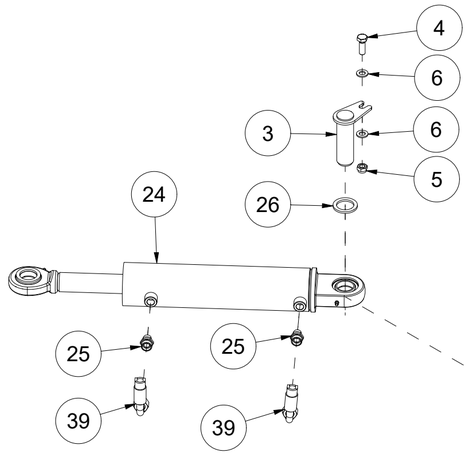


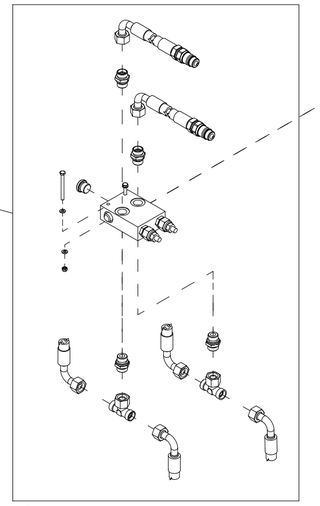

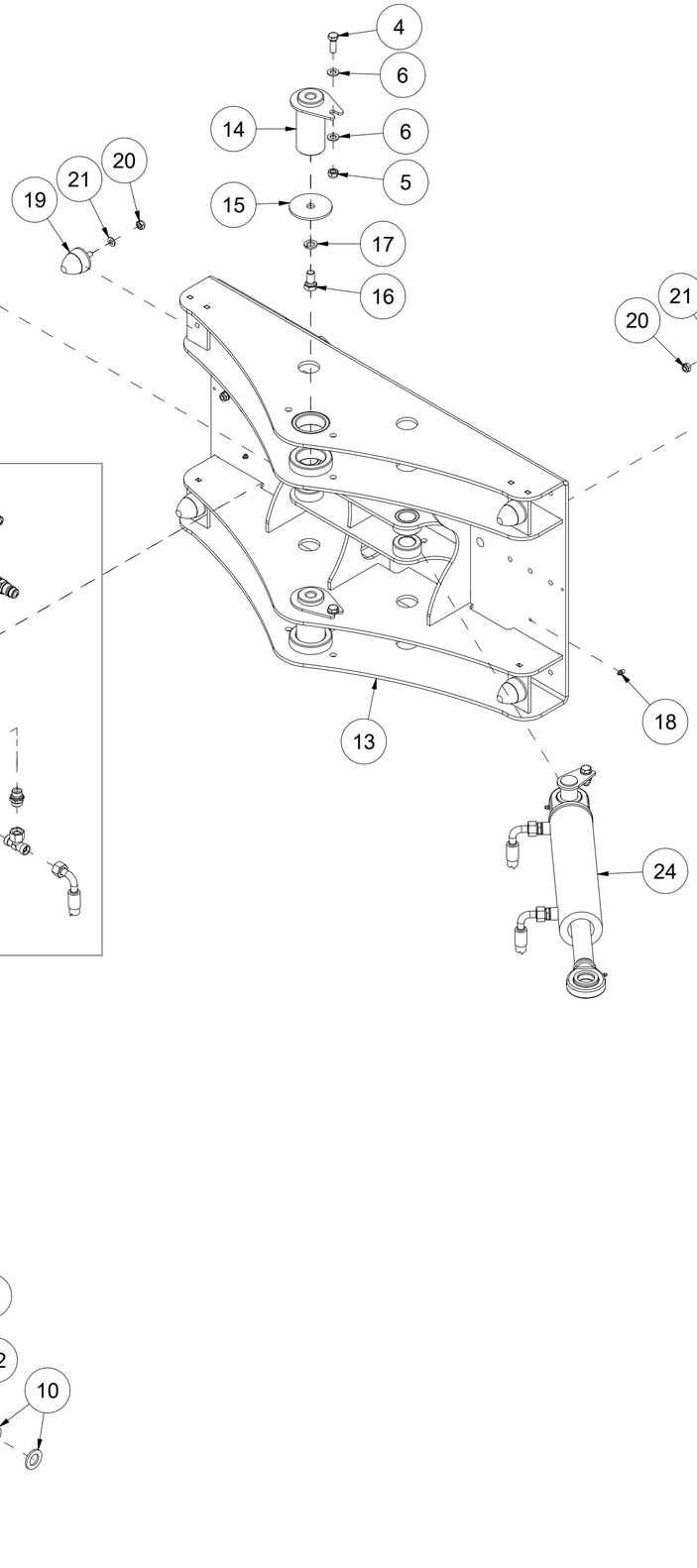


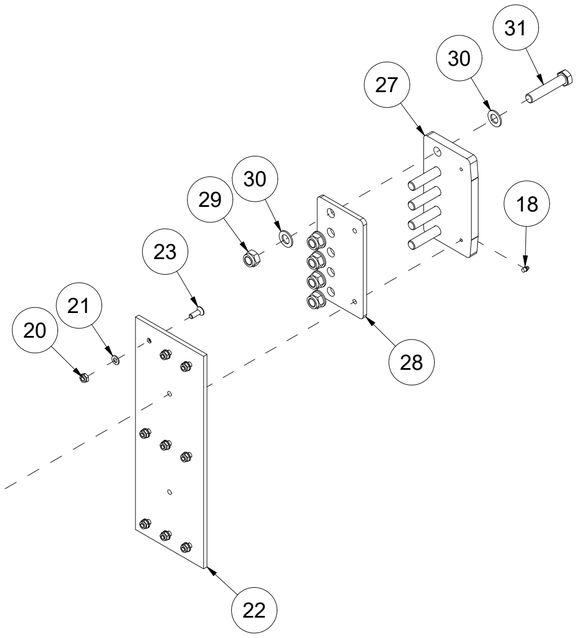

| Pos | Qty | Article no | Designation |
|---|---|---|---|
| 1 | 1 | 24101008 | External swing module |
| 2 | 4 | 2556142 | Linch pin Ø10x40 |
| 3 | 4 | 24101020 | Bolt Ø35x112 |
| 4 | 6 | 2422350 | Hexagon screw M12x35 ElZn 8.8 DIN 933 |
| 5 | 6 | 2483611 | Locking nut M12 ElZn DIN 985 |
| 6 | 12 | 2531069 | Washer M12 ElZn DIN 125 |
| 7 | 2 | 2935088 | Adhesive label 90x48 Hand pinch hazard |
| 8 | 2 | 2526321 | Top strut bolt cat. 1 Ø19x70 |
| 9 | 2 | 2112247 | Skid pad Ø285 |
| 10 | 4 | 2533095 | Washer Ø26/45x4 |
| 11 | 2 | 24101068 | Bracket |
| 12 | 2 | 2526326 | Top strut bolt cat. 2 Ø25,4x103 |
| 13 | 1 | 24101009 | Internal swing module |
| 14 | 2 | 24101056 | Bolt Ø60x118 |
| 15 | 2 | 24101057 | Washer Ø17/90x5 |
| 16 | 2 | 2422485 | Hexagon screw M16x30 ElZn 8.8 DIN 933 |
| 17 | 2 | 2534078 | Spring washer M16 ElZn DIN 127 |
| 18 | 8 | 2478407 | Grease nipple, Straight M8 |
| 19 | 4 | 2225110 | Rubber damper 52X58x55Sh |
| 20 | 22 | 2483610 | Locking nut M10 ElZn DIN 985 |
| 21 | 22 | 2531060 | Washer M10 ElZn DIN 125 |
| 22 | 2 | 24101049 | Sliding rail 200x540x10 |
| 23 | 18 | 2472299 | Unbrako countersunk head screw M10x30 ElZn DIN 7991 |
| 24 | 2 | 2955008 | Cylinder 80x40x250 l35l35 |
| 25 | 4 | 2957750 | Hexagon nipple GEK BSP 3/8" L15 ED |
| 26 | 8 | 24101060 | Washer Ø36/50,7x4 |
| 27 | 2 | 24101040 | Fastening plate |
| 28 | 2 | 24101048 | Sliding rail 135x200x10 |
| 29 | 10 | 2483615 | Locking nut M20 ElZn DIN 985 |
| 30 | 20 | 2531086 | Washer M20 ElZn DIN 125 |
| 31 | 10 | 2422583 | Hexagon screw M20x100 ElZn 8.8 DIN 931 |
| 32 | 2 | 2957411 | Plug 1/2 w/Gasket |
| 33 | 1 | 2955339 | Safety valve /alum TS rotation |
| 34 | 2 | 2422221 | Hexagon screw M6x65 ElZn 8.8 DIN 931 |
| 35 | 2 | 2483608 | Locking nut M6 ElZn DIN 985 |
| 36 | 4 | 2531039 | Washer M6 ElZn DIN 125 |
| 37 | 4 | 2957768 | Hexagon nipple GEK BSP 1/2" L15 ED |
| 38 | 2 | 2957775 | T-hexagon nipple EVTK 15L |
| 39 | 4 | 2958527 | Hydraulic hose 1/2" L800 |
| 40 | 2 | 2958180 | Hydraulic hose 1/2" L3250 |

# 009 Coupling frame FUP450

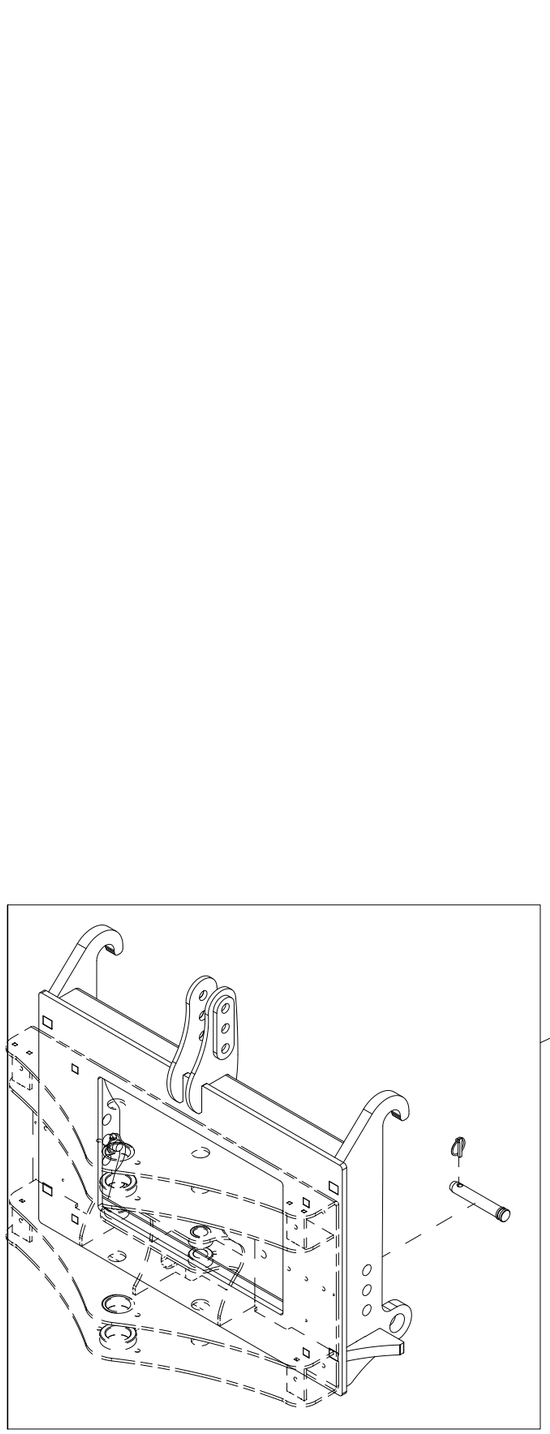

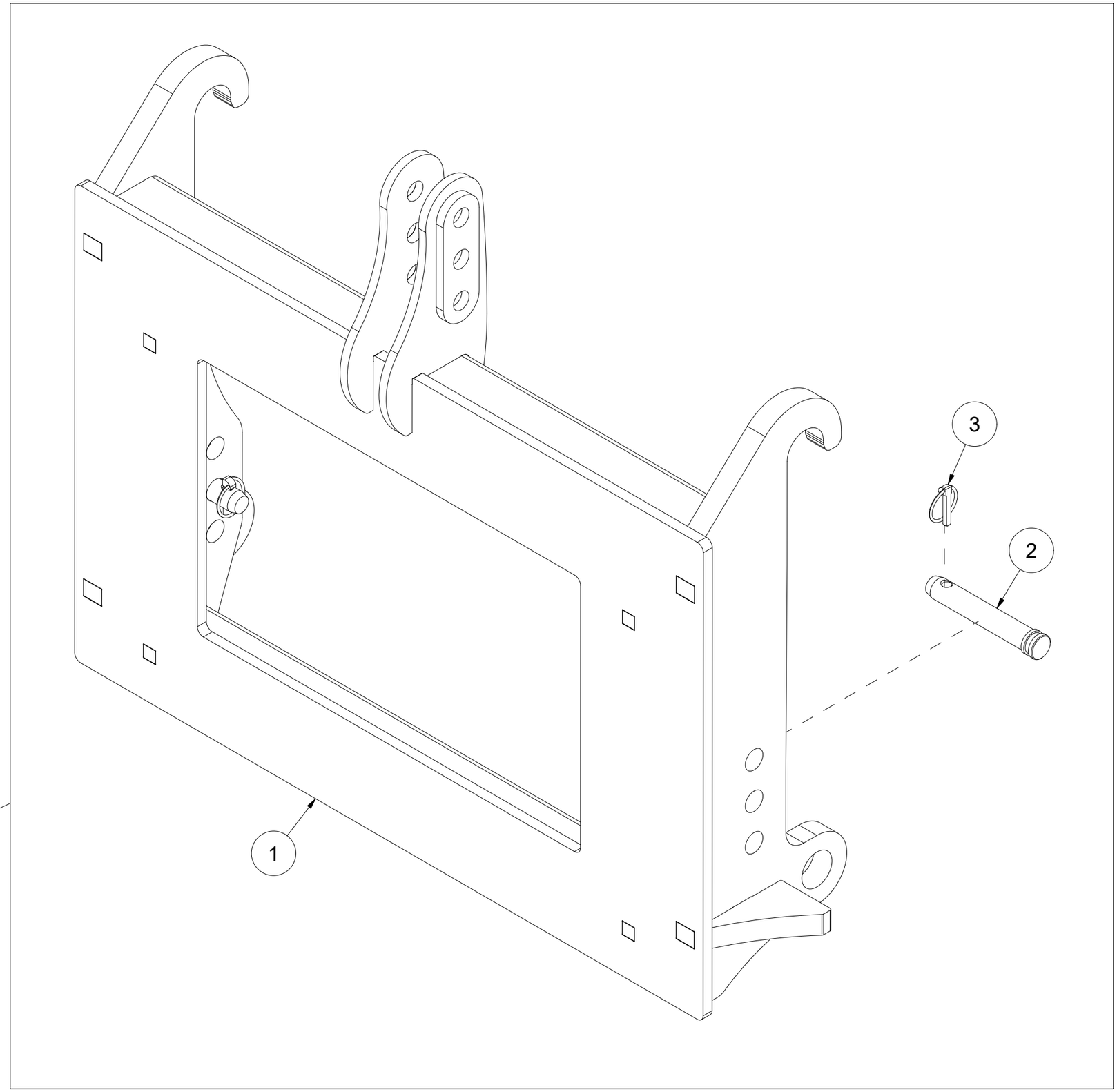

| Pos | Qty | Article no | Designation |
|---|---|---|---|
| 1 | 1 | 24101046 | Frame |
| 2 | 2 | 2551732 | Drawbar bolt cat. 2 Ø28x134 |
| 3 | 2 | 2556142 | Linch pin Ø10x40 |